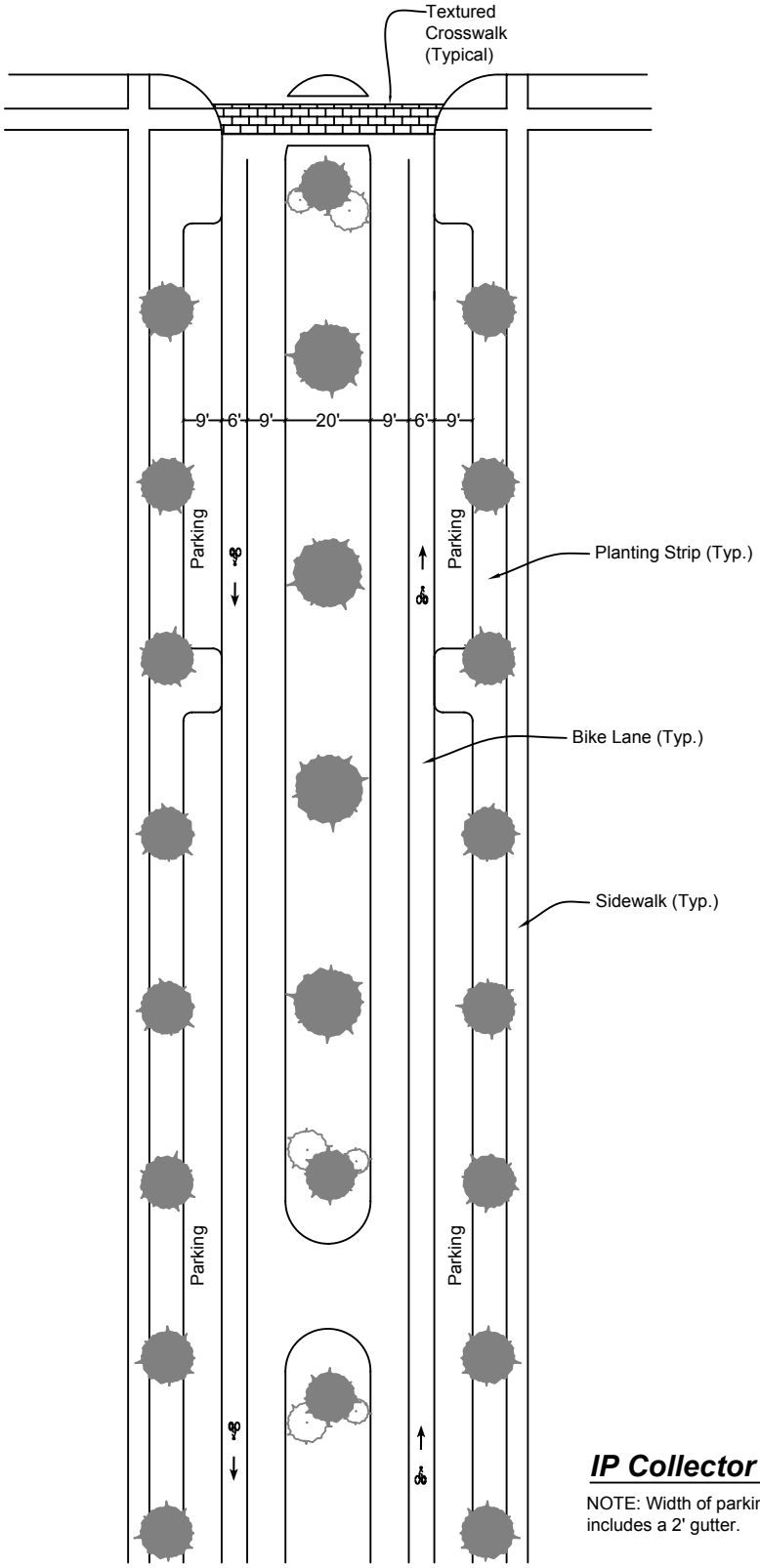

IP Collector With Median

NOTE: Width of parking includes a 2' gutter.

IP COLLECTOR WITH MEDIAN - PLAN VIEW

DRAWING NO. 19

(NOT TO SCALE)